NCERT Archive

SOLUTIONS BOOK

# CLASS 8

## Maths · Ganita Prakash

CHAPTER 4

## Quadrilaterals

Complete In-text Questions, Figure it Out and Activities Solutions

In-text Questions | Figure it Out | Activities

# Contents

Class 8 Maths · Ganita Prakash · Chapter 4 — Quadrilaterals

4.1 **Rectangles and Squares** — 3
16 questions · Q1 Q2 Q3 Q4 Q5 Q6 Q7 Q8 Q9 Q10 Q11 Q12 Q13 Q14 Q15 Q16

4.2 **Angles in a Quadrilateral** — 18
2 questions · Q1 Q2

4.3 **More Quadrilaterals with Parallel Opposite Sides** — 20
7 questions · Q1 Q2 Q3 Q4 Q5 Q6 Q7

4.4 **Quadrilaterals with Equal Sidelengths** — 26
9 questions · Q1 Q2 Q3 Q4 Q5 Q6 Q7 Q8 Q9

4.5 **Playing with Quadrilaterals** — 35
5 questions · Q1 Q2 Q3 Q4 Q5

4.6 **Kite and Trapezium** — 40
14 questions · Q1 Q2 Q3 Q4 Q5 Q6 Q7 Q8 Q9 Q10 Q11 Q12 Q13 Q14

4.7 **Puzzle Time: Which Quad?** — 54
3 questions · Q1 Q2 Q3

Every question is followed by its answer. Question numbers above are clickable and the PDF bookmarks panel lets you jump to any exercise set or question. Figures are redrawn from the NCERT textbook data (© NCERT) for educational use.

NCERT ARCHIVE

CLASS 8 MATHS · CHAPTER 4

# 4.1 Rectangles and Squares

Solutions · 16 questions

**Directions (Questions 1–16):** Solutions to the in-text questions and Figure it Out, numbered in the order in which they appear in the chapter. Activities and constructions are answered with the steps to follow and the reasoning behind them.

QUESTION 1 *In-text · p. 82*

**Observe the following figures. Figs. (i), (ii), and (iii) are quadrilaterals, and the others are not. Why?**

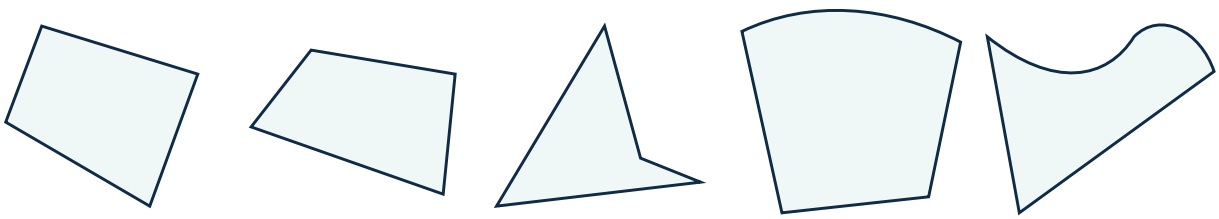

*(i)* *(ii)* *(iii)* *(iv)* *(v)*

ANSWER

A quadrilateral is a closed figure bounded by **four line segments** (its sides), with four vertices and four angles.

### a Figs. (i), (ii) and (iii)

- Each is closed and made of exactly **four straight sides** joined end to end, so each has four vertices and four angles.
- Fig. (iii) is dented inwards, but it still has four straight sides and four angles, so it is a quadrilateral.

NCERT ARCHIVE

### b Figs. (iv) and (v)

- Fig. (iv) has a **curved** top; a curved boundary is not a line segment, so the figure is not bounded by four line segments.
- Fig. (v) is bounded by curved arcs and straight sides in a different pattern (it has only three straight-sided corners), so it is not made of four line segments either.

**Figs. (i)–(iii) are quadrilaterals (four straight sides); (iv) and (v) are not because they have curved sides.**

QUESTION 2 *In-text · pp. 83–85*

**A Carpenter's Problem: A carpenter needs to put together two thin strips of wood so that when a thread is passed through their endpoints, it forms a rectangle. She already has one 8 cm long strip. What should be the length of the other strip? Where should they both be joined?**
**1. What is the length of the other diagonal?**
**2. What is the point of intersection of the two diagonals?**
**3. What should the angle be between the diagonals?**

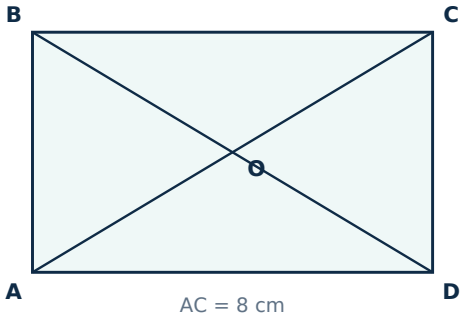


*Fig. 2: rectangle ABCD with diagonals meeting at O*

ANSWER

The strips are the diagonals AC and BD of the rectangle ABCD, with AC = 8 cm. We use congruence of triangles to find the three answers.

### a 1. Length of the other diagonal

- In ΔADC and ΔDAB: AB = CD (opposite sides of the rectangle), ∠BAD = ∠CDA = 90°, and AD is common.

NCERT ARCHIVE

- So ΔADC ≅ ΔDAB by SAS, hence AC = BD (corresponding parts). The other strip is also **8 cm**.

### b 2. Point of intersection

- Let the diagonals meet at O. In ΔAOB and ΔCOD: AB = CD, ∠AOB = ∠COD (vertically opposite angles).
- Since ∠B = 90°, ∠3 + ∠1 = 90°; in ΔBCD, ∠3 + ∠2 + 90° = 180°, so ∠3 + ∠2 = 90°. Hence ∠1 = ∠2.
- By AAS, ΔAOB ≅ ΔCOD, so OA = OC and OB = OD: the diagonals **bisect each other**, and O is the midpoint of each strip.

### c 3. Angle between the diagonals

- If the equal diagonals bisect each other with *any* angle x between them (Deduction 3), the base angles of the isosceles ΔAOB are a = 90° − x/2 and of ΔAOD are b = x/2.
- Every angle of the quadrilateral is a + b = 90° − x/2 + x/2 = 90°, and ΔAOB ≅ ΔCOD, ΔAOD ≅ ΔCOB give opposite sides equal. So it is a rectangle for every x.

**(1) 8 cm (2) The midpoint of both strips (they bisect each other) (3) Any angle**

QUESTION 3 *Math Talk · p. 85*

**Can the following equalities be used to establish that ΔAOD ≅ ΔCOB? AO = CO (proved above); ∠AOB = ∠COD (vertically opposite angles); AD = CB**

ANSWER

To prove two triangles congruent, the given parts must belong to those two triangles and match the congruence rule (SAS, ASA, SSS, AAS).

### a Checking the equalities

- ∠AOB and ∠COD are angles of ΔAOB and ΔCOD, **not** of ΔAOD and ΔCOB.
- For SAS in ΔAOD and ΔCOB we need the angle *between* the equal sides, namely ∠AOD = ∠COB, and the sides OD = OB.
- The three given equalities (two sides and an angle that is not between them, from other triangles) do not fit any congruence rule.

NCERT ARCHIVE

### b A correct way

- AO = CO, OD = OB (diagonals bisect each other) and AD = CB (opposite sides) give ΔAOD ≅ ΔCOB by SSS.
- Or AO = CO, ∠AOD = ∠COB (vertically opposite) and OD = OB give SAS.

**No, these equalities cannot establish it; use AO = CO, OD = OB and AD = CB (SSS) instead.**

QUESTION 4 *In-text · pp. 85–86*

**Deduction 3: Suppose the two equal diagonals bisect each other and have an angle of 60° between them. Can you find all the remaining angles? Can you find the value of a? Can we now identify what type of quadrilateral ABCD is? What can we say about its sides?**

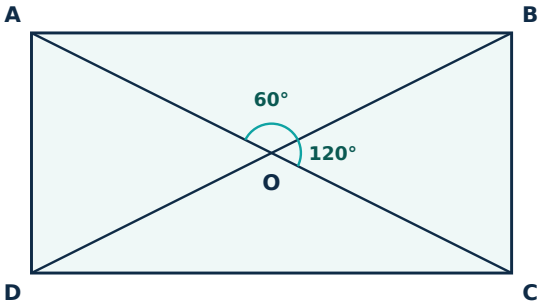


*Diagonals equal and bisecting, with 60° between them*

ANSWER

Take the equal diagonals AC = BD bisecting at O, with ∠AOB = 60°. Then OA = OB = OC = OD.

### a Angles at O

- ∠AOB = ∠COD = 60° (vertically opposite) and ∠AOD = ∠BOC = 180° − 60° = 120° (linear pair).

### b The value of a

- In ΔAOB, OA = OB, so the angles opposite them are equal, say a. Then a + a + 60° = 180°, so 2a = 120° and **a = 60°**.

NCERT ARCHIVE

- In ΔAOD, OA = OD and ∠AOD = 120°, so each base angle is (180° − 120°) ÷ 2 = 30°.

### c Angles and sides of ABCD

- Every angle of ABCD is 60° + 30° = **90°**.
- ΔAOB ≅ ΔCOD and ΔAOD ≅ ΔCOB (SAS), so AB = CD and AD = CB.
- All angles are 90° and opposite sides are equal, so ABCD is a **rectangle**.

**a = 60°; the other angles at O are 60°, 120°, 120°; ABCD is a rectangle.**

**QUESTION 5** *In-text · p. 87*

**Will ABCD remain a rectangle if the angles between the diagonals are changed? Can we generalise this? (Take one of the angles between the diagonals as x. What are the other angles? What is the value of a in terms of x?)**

**ANSWER**

Let the equal diagonals bisect each other with ∠AOB = x. The same reasoning as for 60° is repeated with letters.

### a Angles between the diagonals

- The four angles at O are x, x, 180° − x and 180° − x (vertically opposite angles and linear pairs).

### b Base angles of the isosceles triangles

In ΔAOB: a + a + x = 180° ⇒ 2a = 180° − x ⇒ a = 90° − x/2
In ΔAOD: b + b + (180° − x) = 180° ⇒ 2b = x ⇒ b = x/2

### c Angles and sides of the quadrilateral

- Each angle = a + b = 90° − x/2 + x/2 = **90°**.
- ΔAOB ≅ ΔCOD and ΔAOD ≅ ΔCOB give AB = CD and AD = CB.

NCERT ARCHIVE

**Yes. For every x, equal diagonals that bisect each other give a rectangle; a = 90° − x/2.**

QUESTION 6 *In-text · p. 89*

**Would we be wrong if we just define a rectangle as a quadrilateral in which all the angles are 90°? Try constructing a quadrilateral in which the angles are all 90° but the opposite sides are not equal. Are you able to construct such a quadrilateral?**

ANSWER

Deduction 4 shows that this is impossible: all angles 90° forces opposite sides to be equal.

### a Proof (Deduction 4)

- Let ABCD have all angles 90° and join BD. In ΔBAD and ΔDCB: ∠A = ∠C = 90° and BD is common.
- Since ∠B = 90°, ∠3 + ∠1 = 90°; in ΔBCD, ∠3 + ∠2 + 90° = 180°, so ∠3 + ∠2 = 90°. Hence ∠1 = ∠2.
- By AAS, ΔBAD ≅ ΔDCB, so AD = CB and DC = BA.

### b Conclusion

- Any quadrilateral with four right angles automatically has equal opposite sides, so no such quadrilateral exists with unequal opposite sides. The simpler definition is not wrong.

**No. The definition is correct; such a quadrilateral cannot be constructed.**

NCERT ARCHIVE

QUESTION 7 *In-text · p. 89*

**Is it wrong to write ΔBAD ≅ ΔCDB? Why?**

ANSWER

In a congruence statement, vertices must be written in the order in which they correspond.

### a Checking the correspondence

- The correct statement is ΔBAD ≅ ΔDCB, which matches B↔D, A↔C and D↔B.
- ΔBAD ≅ ΔCDB would match B↔C, A↔D, D↔B, so side AD would correspond to side DB, and angle B to angle C; these are not equal in general.

**Yes, it is wrong: the vertices are not written in corresponding order. The correct statement is ΔBAD ≅ ΔDCB.**

QUESTION 8 *In-text · p. 90*

**Notice that AB acts as a transversal to AD and BC, and ∠A + ∠B = 90° + 90° = 180°. Can you similarly show that AB is parallel to DC (AB ∥ DC)?**

ANSWER

When the sum of the interior angles on the same side of a transversal is 180°, the two lines are parallel.

### a Showing AB ∥ DC

- Take AD as the transversal to AB and DC.
- ∠A + ∠D = 90° + 90° = 180°, and these are interior angles on the same side of AD.
- Hence AB ∥ DC.

**Since ∠A + ∠D = 180° (co-interior angles), AB ∥ DC.**

NCERT ARCHIVE

QUESTION 9 *In-text · p. 90*

**In the quadrilaterals below, are there any non-rectangles?**

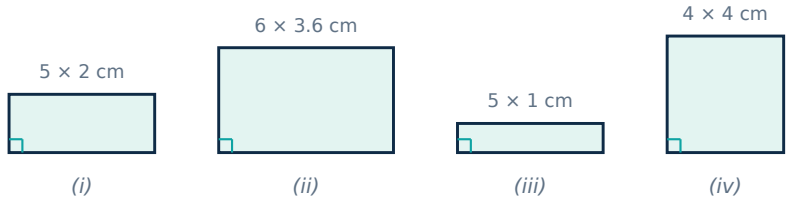


ANSWER

A quadrilateral with all angles equal to 90° is a rectangle (Deduction 4). Each of the four figures has four right angles.

### a Checking each figure

- (i) 5 cm × 2 cm, (ii) 6 cm × 3.6 cm, (iii) 5 cm × 1 cm: all angles are 90°, so each is a rectangle.
- (iv) 4 cm × 4 cm: all angles are 90° and all sides are equal. It is also a rectangle, a special one called a **square**.

**No. All four quadrilaterals are rectangles; (iv) is a special rectangle with equal sides (a square).**

NCERT ARCHIVE

QUESTION 10 *In-text · pp. 91–93*

**Let us consider the Carpenter’s Problem again. If the wooden strips have to be placed such that the thread passing through their endpoints forms a square, what must be done? What should be the angle formed by the diagonals? Using this fact, construct a square with a diagonal of length 8 cm.**

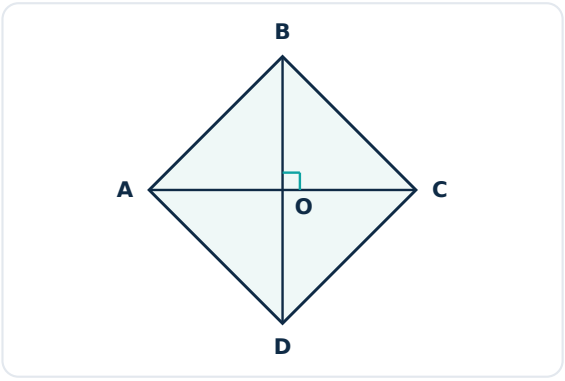


*Square ABCD: diagonals meet at 90° at O*

ANSWER

Equal diagonals that bisect each other already give a rectangle. To get equal sides as well, the angle between the diagonals must be found.

### a Deduction 5: the angle between the diagonals

- Take a square ABCD with diagonals meeting at O. Consider ΔBOA and ΔBOC.
- BO is common, OA = OC (the diagonals bisect each other) and BA = BC (sides of the square). By SSS, ΔBOA ≅ ΔBOC.
- So ∠BOA = ∠BOC (corresponding parts), and ∠BOA + ∠BOC = 180° (linear pair). Hence each is **90°**.

### b What must be done

- Place the strips so that they are equal, bisect each other **and cross at right angles**. Then all four triangles at O are congruent (SAS), so all four sides are equal and all angles are 90°: a square.

### c Construction of a square with diagonal 8 cm

- Draw AC = 8 cm and find its midpoint O (perpendicular bisector with compass).

NCERT ARCHIVE

- On the perpendicular bisector mark B and D with OB = OD = 4 cm on either side of O.
- Join AB, BC, CD and DA: ABCD is the required square (side $4\sqrt{2} \approx 5.66$ cm).

**The diagonals must be equal, bisect each other and meet at 90°.**

QUESTION 11 *In-text · p. 93*

**What are the measures of ∠1, ∠2, ∠3, and ∠4 in the square ABCD (the angles that the diagonals AC make with the sides)? See if you can reason and/or experiment to figure this out.**

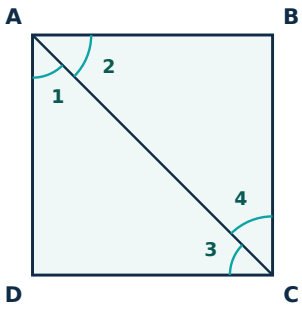


ANSWER

The diagonal AC divides the 90° angles of the square at A and C. Use the angle-sum property of a triangle.

### a Angles ∠1 and ∠3

- In ΔADC: ∠1 + ∠3 + 90° = 180°. Since AD = DC, ∠1 = ∠3.
- So 2∠1 = 90°, giving ∠1 = ∠3 = **45°**.

### b Angles ∠2 and ∠4

- Similarly, in ΔABC: ∠2 + ∠4 + 90° = 180° and AB = BC, so ∠2 = ∠4 = **45°**.

### c Property 5

- The diagonals of a square bisect the angles of the square.

**∠1 = ∠2 = ∠3 = ∠4 = 45°**

NCERT ARCHIVE

QUESTION 12 *Figure it Out · p. 94*

**1. Find all the other angles inside the following rectangles. [(i) rectangle ABCD with ∠OAB = 30° where O is the intersection of the diagonals; (ii) rectangle PQRS with ∠QOR = 110°]**

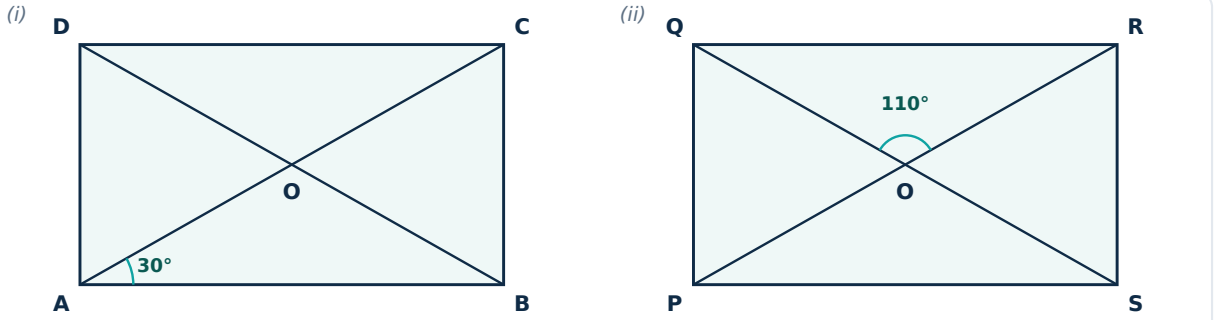


ANSWER

In a rectangle the diagonals are equal and bisect each other, so OA = OB = OC = OD. Each triangle formed by two halves of the diagonals is isosceles.

### a (i) ∠OAB = 30°

- OA = OB, so ∠OBA = ∠OAB = 30°. In ΔAOB: ∠AOB = 180° − 30° − 30° = 120°, so ∠COD = 120° and ∠AOD = ∠BOC = 60°.
- ∠CAD = 90° − 30° = **60°** (angle of the rectangle at A), and ∠ADB = 90° − ∠ABD = 90° − 30° = **60°**.
- ∠BDC = ∠ACD = 90° − 60° = **30°** and ∠ACB = **60°** (using OC = OD = OB).

### b (ii) ∠QOR = 110°

- ∠POS = ∠QOR = 110° (vertically opposite) and ∠POQ = ∠ROS = 180° − 110° = **70°**.
- In ΔOQR, OQ = OR, so ∠OQR = ∠ORQ = (180° − 110°) ÷ 2 = **35°**; likewise ∠OPS = ∠OSP = **35°**.
- ∠OQP = 90° − 35° = **55°**; in ΔOPQ, OP = OQ, so ∠OPQ = **55°**; similarly ∠ORS = ∠OSR = **55°**.

### c Check

(i) ΔAOB: 30° + 30° + 120° = 180°. (ii) ΔOPQ: 55° + 55° + 70° = 180°, ΔOQR: 35° + 35° + 110° = 180°.

NCERT ARCHIVE

**(i) ∠ABD = ∠ACD = ∠BDC = 30°, ∠CAD = ∠ADB = ∠ACB = 60°. (ii) ∠POS = 110°, ∠POQ = ∠ROS = 70°, ∠OQR = ∠ORQ = ∠OPS = ∠OSP = 35°, ∠OQP = ∠OPQ = ∠ORS = ∠OSR = 55°.**

QUESTION 13 *Figure it Out · p. 94*

**2. Draw a quadrilateral whose diagonals have equal lengths of 8 cm that bisect each other, and intersect at an angle of (i) 30° (ii) 40° (iii) 90° (iv) 140°**

ANSWER

Equal diagonals that bisect each other always form a **rectangle** (Q5). The same steps are used for every angle θ.

### a Steps of construction (for θ = 30°, 40°, 90°, 140°)

- Draw AB = 8 cm and mark its midpoint O (perpendicular bisector with compass).
- At O draw a line l making an angle θ with AB (use a protractor).
- On l mark C and D on opposite sides of O with OC = OD = 4 cm (so that CD = 8 cm and they bisect each other).
- Join AC, CB, BD and DA. ACBD is the required quadrilateral.

### b What each quadrilateral is

| Angle θ | Quadrilateral | Sides (cm) |
|---|---|---|
| 30° | Rectangle | 2.07 and 7.73 |
| 40° | Rectangle | 2.74 and 7.52 |
| 90° | Square | 5.66 each |
| 140° | Rectangle | 7.52 and 2.74 |

### c Reason

- Sides are 2 × 4 × sin(θ/2) and 2 × 4 × cos(θ/2), which can be used to check the drawing by measuring.
- For 90° the diagonals are equal and perpendicular, so the rectangle is a square.

NCERT ARCHIVE

**Each figure is a rectangle with diagonals 8 cm; for 90° it is a square.**

QUESTION 14 *Figure it Out · p. 94*

**3. Consider a circle with centre O. Line segments PL and AM are two perpendicular diameters of the circle. What is the figure APML? Reason and/or experiment to figure this out.**

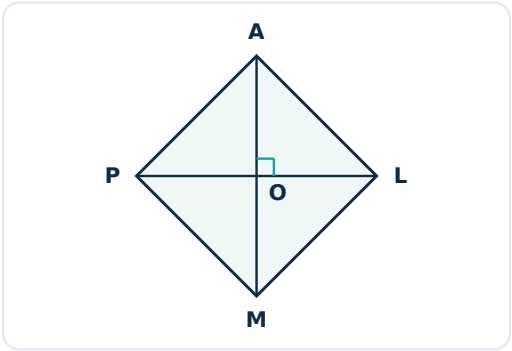


ANSWER

The vertices A, P, M, L lie on the circle, and PL and AM are the diagonals of the quadrilateral APML.

### a Reasoning

- PL and AM are diameters, so both have length 2r: the diagonals are **equal**.
- Both pass through the centre O, and OP = OL = OA = OM = r, so they **bisect each other**.
- They are perpendicular (given), so they meet at 90°.
- Equal diagonals that bisect each other at 90° form a square (Deduction 5).

**APML is a square.**

NCERT ARCHIVE

QUESTION 15 *Figure it Out · p. 94 (Math Talk)*

**4. We have seen how to get 90° using paper folding. Now, suppose we do not have any paper but two sticks of equal length, and a thread. How do we make an exact 90° using these?**

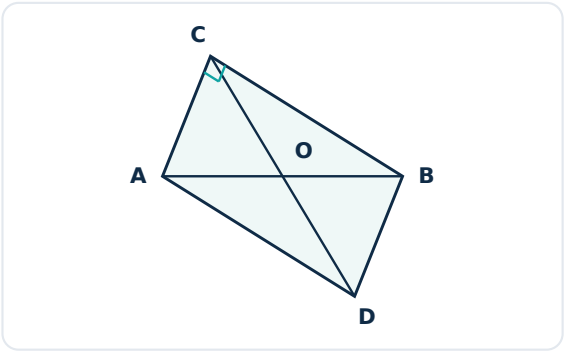


*Sticks AB and CD with a common midpoint O*

ANSWER

Use the Carpenter's result: equal diagonals that bisect each other form a rectangle, and every angle of a rectangle is 90°.

### a Method

- Let AB and CD be the two equal sticks. Place them so that their midpoints coincide at O (they cross in any manner).
- Pass the thread from A to C, then to B, then to D, and back to A so that it goes through the four ends.
- ACBD is a rectangle because its diagonals AB and CD are equal and bisect each other.
- Hence the angle at C (∠ACB) is exactly **90°**.

### b Another way

The properties of an isosceles triangle can also be used to get a right angle.

**Join the midpoints of the two equal sticks; the thread through the end points forms a rectangle, giving 90° at every corner.**

NCERT ARCHIVE

QUESTION 16 *Figure it Out · p. 94 (Try This)*

**5. We saw that one of the properties of a rectangle is that its opposite sides are parallel. Can this be chosen as a definition of a rectangle? In other words, is every quadrilateral that has opposite sides parallel and equal, a rectangle?**

ANSWER

A definition must describe *only* rectangles. We test whether "opposite sides parallel and equal" forces right angles.

### a Counter-example

- In Section 4.3 a parallelogram with sides 4 cm and 5 cm and an angle of 30° is constructed. Its opposite sides are parallel and equal, but its angles are 30°, 150°, 30°, 150°, not 90°.

### b Conclusion

- Such quadrilaterals (parallelograms) include rectangles but also many others that are not rectangles.

**No. It cannot be chosen as a definition; it describes a parallelogram, which need not be a rectangle.**

NCERT ARCHIVE

CLASS 8 MATHS · CHAPTER 4

# 4.2 Angles in a Quadrilateral

Solutions · 2 questions

**Directions (Questions 1–2):** Solutions to the in-text questions, numbered in the order in which they appear in the chapter. Activities and constructions are answered with the steps to follow and the reasoning behind them.

QUESTION 1 *In-text · p. 94*

**Is it possible to construct a quadrilateral with three angles equal to 90° and the fourth angle not equal to 90°? But why not?**

ANSWER

The reason is the angle-sum property of a quadrilateral (proved in the next question): the four angles add up to 360°.

### a Using the angle sum

Fourth angle = 360° − (90° + 90° + 90°)
= 360° − 270° = 90°

### b Conclusion

- The fourth angle is forced to be 90°, so it is impossible for the fourth angle to be anything else.

**No, it is not possible: if three angles are 90°, the fourth is 360° − 270° = 90°.**

NCERT ARCHIVE

QUESTION 2 *In-text · pp. 94–95*

**We have seen that the sum of the angles of a triangle is 180°. Is there a similar regularity in the sum of the angles of a quadrilateral? (Consider a quadrilateral SOME, draw a diagonal SM and add all six angles.)**

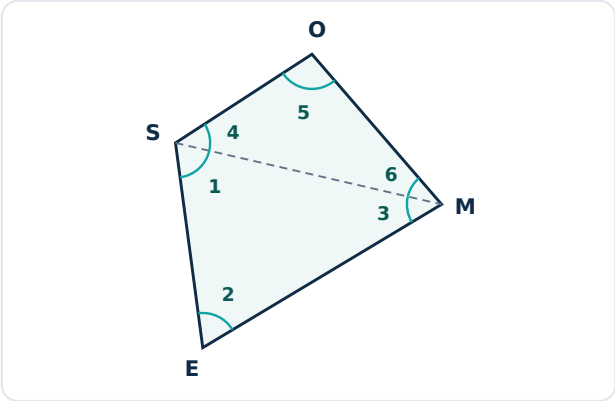


*Quadrilateral SOME with diagonal SM*

ANSWER

Draw the diagonal SM in the quadrilateral SOME. It divides the quadrilateral into two triangles, ΔSEM and ΔSOM.

### a Sum of the angles of the two triangles

In ΔSEM: $\angle 1 + \angle 2 + \angle 3 = 180°$

In ΔSOM: $\angle 4 + \angle 5 + \angle 6 = 180°$

Adding: $\angle 1 + \angle 2 + \angle 3 + \angle 4 + \angle 5 + \angle 6 = 180° + 180° = 360°$

### b Regrouping

- $(\angle 1 + \angle 4)$ is the angle at S, $\angle 2$ is the angle at E, $(\angle 3 + \angle 6)$ is the angle at M and $\angle 5$ is the angle at O of the quadrilateral.
- So $(\angle 1 + \angle 4) + (\angle 3 + \angle 6) + \angle 2 + \angle 5 = 360°$.

**The sum of all the angles of any quadrilateral is 360°.**

NCERT ARCHIVE

CLASS 8 MATHS · CHAPTER 4

# 4.3 More Quadrilaterals with Parallel Opposite Sides

Solutions · 7 questions

**Directions (Questions 1–7):** Solutions to the in-text questions, numbered in the order in which they appear in the chapter. Activities and constructions are answered with the steps to follow and the reasoning behind them.

QUESTION 1 *In-text · p. 96*

## Is a rectangle a parallelogram?

ANSWER

A parallelogram is a quadrilateral in which the opposite sides are parallel.

### a Checking the definition

- A rectangle has both pairs of opposite sides parallel (Property 3 of a rectangle), so it satisfies the definition of a parallelogram.
- It is a special parallelogram in which all the angles are 90°.

**Yes. Every rectangle (and therefore every square) is a parallelogram.**

NCERT ARCHIVE

QUESTION 2 *In-text · pp. 96–98*

**Draw a parallelogram with adjacent sides of lengths 4 cm and 5 cm, and an angle of 30° between them. What are the remaining angles of the parallelogram? What are the lengths of the remaining sides?**

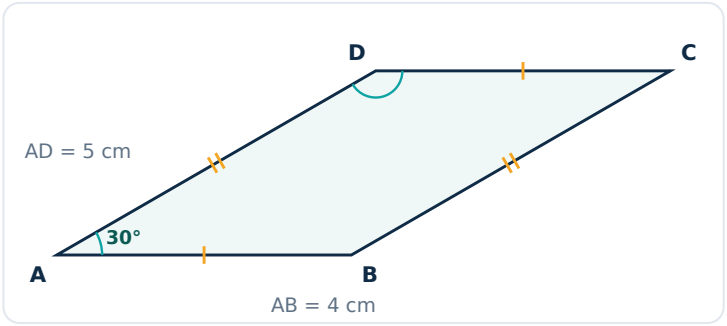


ANSWER

Let ABCD have AB = 4 cm, AD = 5 cm, ∠A = 30°, with AB ∥ DC and AD ∥ BC.

### a Remaining angles (Deduction 6)

- AB ∥ DC and AD is a transversal: ∠A + ∠D = 180°, so ∠D = 180° − 30° = **150°**.
- AD ∥ BC and AB is a transversal: ∠A + ∠B = 180°, so ∠B = **150°**.
- ∠C + ∠D = 180° gives ∠C = 180° − 150° = **30°**.

### b Remaining sides (Deduction 7)

- In ΔABD and ΔCDB: ∠A = ∠C, ∠ADB = ∠CBD (alternate angles, AD ∥ BC) and BD is common, so ΔABD ≅ ΔCDB (AAS).
- Hence AD = CB = **5 cm** and AB = CD = **4 cm**.

### c Check

Angle sum: 30° + 150° + 30° + 150° = 360°.

**∠B = 150°, ∠C = 30°, ∠D = 150°; BC = 5 cm and CD = 4 cm.**

NCERT ARCHIVE

QUESTION 3 *In-text · p. 97*

**What about the opposite angles? Will they be equal in all parallelograms? If yes, how can we be sure? (Take one of the angles of parallelogram PARE as x. What are the other angles?)**

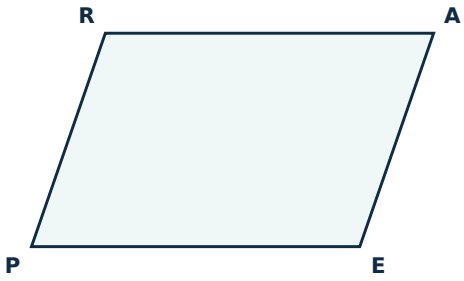


ANSWER

In the parallelogram PARE, adjacent angles lie between parallel lines, so they add up to 180°.

### a Using one angle x

$\angle P = x$

$\angle P + \angle R = 180° \Rightarrow \angle R = 180° - x$

$\angle A + \angle R = 180° \Rightarrow \angle A = 180° - (180° - x) = x$

$\angle P + \angle E = 180° \Rightarrow \angle E = 180° - x$ (and $\angle R = \angle E = 180° - x$)

### b Why this works for every parallelogram

- Nothing special was assumed about x, so the argument holds for all parallelograms.
- Hence $\angle P = \angle A = x$ and $\angle R = \angle E = 180° - x$.

**Yes. Opposite angles of every parallelogram are equal, and adjacent angles add up to 180°.**

NCERT ARCHIVE

QUESTION 4 *In-text · p. 98*

**Can we again use congruence to show that the opposite sides of a parallelogram are equal? Which two triangles can be considered for this? Is it wrong to write ΔABD ≅ ΔCBD? Why?**

ANSWER

Draw the diagonal BD of the parallelogram ABCD and compare the two triangles it makes.

### a The two triangles

- In ΔABD and ΔCDB: ∠A = ∠C (opposite angles of a parallelogram), ∠ADB = ∠CBD (alternate angles, AD ∥ BC) and BD is common.
- So ΔABD ≅ ΔCDB by AAS, and hence AD = CB and AB = CD.

### b Is ΔABD ≅ ΔCBD wrong?

- **Yes.** This statement matches A↔C, B↔B, D↔D, so AB would correspond to CB and AD to CD, which are not equal in general.
- The correct order is ΔABD ≅ ΔCDB (A↔C, B↔D, D↔B).

> **Use ΔABD ≅ ΔCDB (AAS) to get AD = CB and AB = CD. Writing ΔABD ≅ ΔCBD is wrong.**

QUESTION 5 *In-text · p. 98*

**Are the diagonals of a parallelogram always equal? Check with the parallelogram that you have constructed.**

ANSWER

Use the parallelogram of the earlier question: AB = 4 cm, AD = 5 cm, ∠A = 30°.

### a Measuring/calculating the diagonals

- $AC^2 = 4^2 + 5^2 + 2 \times 4 \times 5 \times \cos 30° \approx 75.6$, so AC ≈ **8.70 cm**.

NCERT ARCHIVE

- $BD^2 = 4^2 + 5^2 - 2 \times 4 \times 5 \times \cos 30° \approx 6.4$, so BD ≈ **2.52 cm**.
- The measured values from the drawing agree, and AC ≠ BD.

**No. The diagonals of a parallelogram need not be equal (here about 8.70 cm and 2.52 cm).**

QUESTION 6 *In-text · pp. 98–99*

**Do the diagonals of a parallelogram bisect each other? Examine the congruence of ΔAOE and ΔYOS in the parallelogram EASY. Is it wrong to write ΔAOE ≅ ΔSOY? Why?**

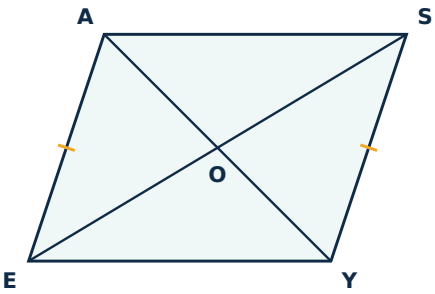


ANSWER

Let the diagonals AY and ES of the parallelogram EASY meet at O.

### a Proof

- AE = YS (opposite sides of a parallelogram).
- ∠EAO = ∠SYO (alternate angles, AE ∥ YS, transversal AY) and ∠AEO = ∠YSO (alternate angles, transversal ES).
- By ASA, ΔAOE ≅ ΔYOS, so OA = OY and OE = OS: **O is the midpoint of both diagonals**.

### b Is ΔAOE ≅ ΔSOY wrong?

- **Yes.** It would match A↔S, so OA would equal OS, which is not true in general (OA = OY).
- The correct statement is ΔAOE ≅ ΔYOS.

**Yes, the diagonals of a parallelogram bisect each other (Property 4).**

NCERT ARCHIVE

QUESTION 7 *In-text · p. 99*

## Do the diagonals of a parallelogram intersect at a particular angle?

ANSWER

For a particular angle to be forced, every parallelogram would have to show it.

### a Evidence

- In the 4 cm × 5 cm, 30° parallelogram the diagonals meet at about 65.8°.
- In a rhombus they meet at 90° and in a rectangle (non-square) at an angle other than 90°.
- For any angle x we can construct a parallelogram whose diagonals bisect each other at x (Section 4.4, Figure it Out Q2 uses 140°).

**No. The diagonals of a general parallelogram can meet at any angle; only in special ones (like a rhombus) is it 90°.**

NCERT ARCHIVE

CLASS 8 MATHS · CHAPTER 4

# 4.4 Quadrilaterals with Equal Sidelengths

Solutions · 9 questions

**Directions (Questions 1–9):** Solutions to the in-text questions and Figure it Out, numbered in the order in which they appear in the chapter. Activities and constructions are answered with the steps to follow and the reasoning behind them.

QUESTION 1 *In-text · p. 99*

**Are squares the only quadrilaterals that have equal sidelengths? Draw two equal sides AD and AB, that are not perpendicular to each other. Can we complete this quadrilateral so that all its sides are of the same length?**

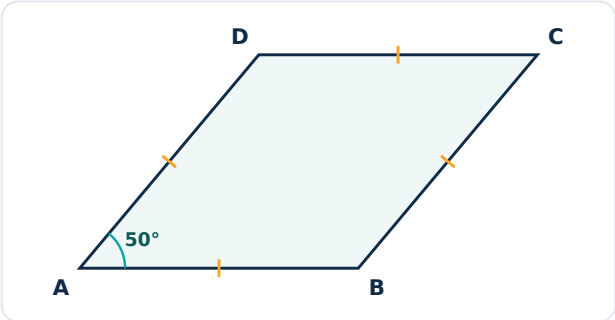


ANSWER

Take AD = AB with ∠A = 50° (any angle less than 180° would do) and find a point C that is at the same distance from B and D.

### a Construction

- Draw AB and AD of equal length with ∠A = 50°.
- With radius AB, draw arcs from B and from D; mark C where the arcs meet.
- Then CB = CD = AB = AD, so all four sides of ABCD are equal.

NCERT ARCHIVE

### b Conclusion

- ABCD has equal sides, but its angles are 50°, 130°, 50°, 130°, not 90°. So squares are **not** the only quadrilaterals with equal sides.
- A quadrilateral with all sides equal is called a **rhombus**.

**The quadrilateral can be completed, and it is a rhombus. So squares are not the only quadrilaterals with equal sides.**

QUESTION 2 *In-text · p. 100*

**In the rhombus GAME, ΔGAE ≅ ΔMAE. (How?)**

ANSWER

Compare the two triangles formed by the diagonal AE of the rhombus GAME.

### a Congruence

- GA = MA and GE = ME (all sides of a rhombus are equal).
- AE is common to both triangles.
- By SSS, ΔGAE ≅ ΔMAE.

### b Consequences

- Corresponding angles are equal: a = b, c = d and ∠G = ∠M.
- In ΔGAE, GE = GA gives a = d, and in ΔMAE, ME = MA gives b = c, so a = b = c = d.

**ΔGAE ≅ ΔMAE by SSS; hence the four angles a, b, c, d formed by the diagonal are equal.**

NCERT ARCHIVE

QUESTION 3 *In-text · p. 100*

**What are the other angles of the rhombus ABCD that we have constructed (with ∠A = 50°)? Reason and/or experiment to figure this out.**

ANSWER

Draw the diagonal BD. The four angles it makes with the sides are equal (shown in the previous question); call each a.

### a Using the diagonal

- In ΔADB: a + a + 50° = 180°, so 2a = 130° and a = 65°.
- The angle at B is a + a = 130° and the angle at D is 130°.

### b Using parallel lines

- A rhombus is a parallelogram (alternate angles equal gives opposite sides parallel), so adjacent angles add up to 180°.
- ∠B = ∠D = 180° − 50° = 130°, and ∠C = ∠A = 50°.

**∠A = ∠C = 50° and ∠B = ∠D = 130°.**

NCERT ARCHIVE

QUESTION 4 *In-text · p. 101*

**So a rhombus is a parallelogram, and a rectangle is also a parallelogram. How can this be represented using a Venn diagram? Where will the set of squares occur in this diagram?**

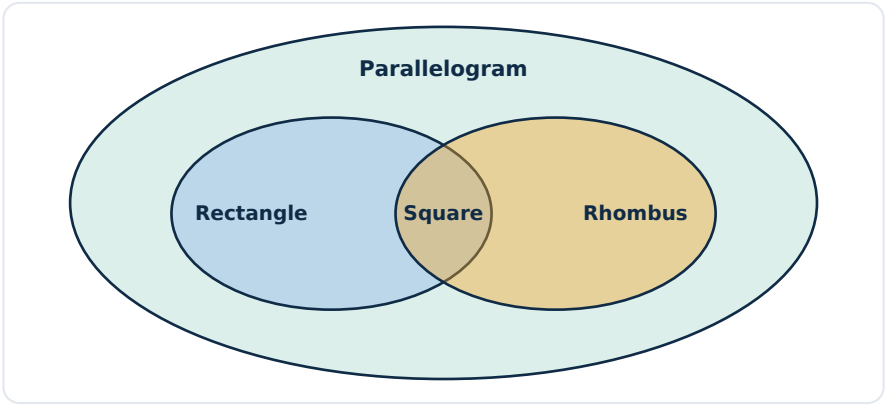


ANSWER

A square is a rectangle, it has parallel opposite sides (so it is a parallelogram) and it has equal sides (so it is a rhombus).

### a Reading the diagram

- The sets of rectangles and rhombuses both lie inside the set of parallelograms.
- A square is both a rectangle and a rhombus, so squares lie in the **overlap** of the rectangle and rhombus sets.

**Squares occur in the common region of Rectangle and Rhombus, inside the Parallelogram set.**

NCERT ARCHIVE

QUESTION 5 *In-text · p. 101*

**Are the diagonals of a rhombus equal?**

ANSWER

Test with the rhombus of the previous questions: ∠A = 50° and side 5 cm.

### a Diagonals

- The diagonals are 2 × 5 × sin 25° ≈ 4.23 cm and 2 × 5 × cos 25° ≈ 9.06 cm.
- They differ. The diagonals of a rhombus are equal only when the rhombus is a square.

**No. The diagonals of a rhombus are not equal in general.**

QUESTION 6 *In-text · p. 102*

**Do the diagonals of a rhombus intersect each other at any particular angle? In the rhombus GAME, ΔGEO ≅ ΔMEO (why?).**

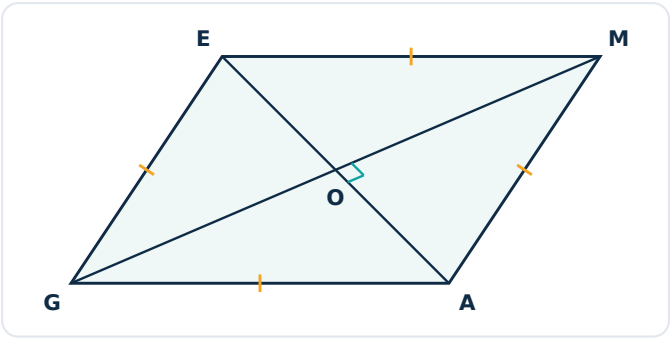


ANSWER

Let the diagonals GM and EA of the rhombus GAME meet at O.

### a Congruence of ΔGEO and ΔMEO

- GE = ME (sides of the rhombus) and EO is common.
- GO = MO because the diagonals of a rhombus (a parallelogram) bisect each other.
- By SSS, ΔGEO ≅ ΔMEO.

NCERT ARCHIVE

**b** **Angle between the diagonals**

- So ∠GOE = ∠MOE (corresponding parts), and they form a linear pair: ∠GOE + ∠MOE = 180°.
- Therefore each is **90°**.

**Yes. The diagonals of a rhombus intersect at 90° (Property 6).**

NCERT ARCHIVE

QUESTION 7 *Figure it Out · p. 102*

**1. Find the remaining angles in the following quadrilaterals. [(i) parallelogram PREA with ∠P = 40°; (ii) parallelogram PQRS with ∠P = 110°; (iii) rhombus UXWV with ∠XVU = 30°; (iv) rhombus OAEI with ∠OEA = 20°]**

*(i)*

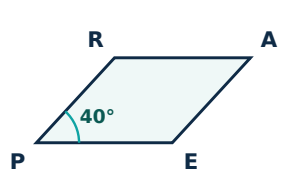


*(ii)*

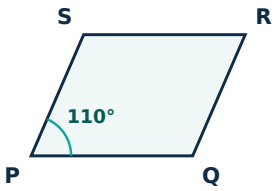


*(iii)*

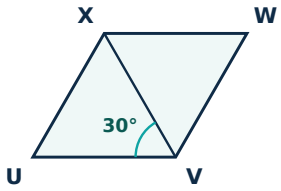


*(iv)*

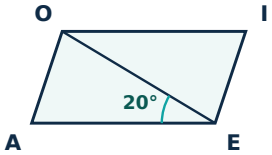


ANSWER

Use: opposite angles of a parallelogram are equal; adjacent angles add up to 180°; the diagonals of a rhombus bisect its angles.

### a (i) Parallelogram PREA, ∠P = 40°

- ∠A = ∠P = **40°**.
- ∠E = 180° − 40° = **140°** and ∠R = ∠E = **140°**.

### b (ii) Parallelogram PQRS, ∠P = 110°

- ∠Q = 180° − 110° = **70°**.
- ∠S = ∠Q = **70°** and ∠R = ∠P = **110°**.

### c (iii) Rhombus UXWV, diagonal XV, ∠XVU = 30°

- The diagonal bisects the angle at V, so ∠XVW = **30°** and ∠UVW = 60°; so ∠WXU = 60° and ∠UXV = ∠WXV = **30°**.
- ∠U = 180° − 60° = **120°** and ∠W = ∠U = **120°**.

### d (iv) Rhombus OAEI, diagonal OE, ∠OEA = 20°

- ∠OEI = 20° (OE bisects ∠E), so ∠E = 40°, and ∠O = ∠E = 40°.
- ∠AOE = ∠EOI = **20°** (OE bisects ∠O).

NCERT ARCHIVE

- ∠A = ∠I = 180° − 40° = **140°**.
- Check in ΔOAE: 20° + 20° + 140° = 180°.

**(i) ∠A = 40°, ∠E = ∠R = 140° (ii) ∠Q = ∠S = 70°, ∠R = 110° (iii) ∠XVU = ∠XVW = 30°, ∠UXV = ∠WXV = 30°, ∠X = ∠V = 60°, ∠U = ∠W = 120° (iv) ∠OEI = ∠AOE = ∠EOI = 20°, ∠A = ∠I = 140°**

QUESTION 8 *Figure it Out · p. 102*

**2. Using the diagonal properties, construct a parallelogram whose diagonals are of lengths 7 cm and 5 cm, and intersect at an angle of 140°.**

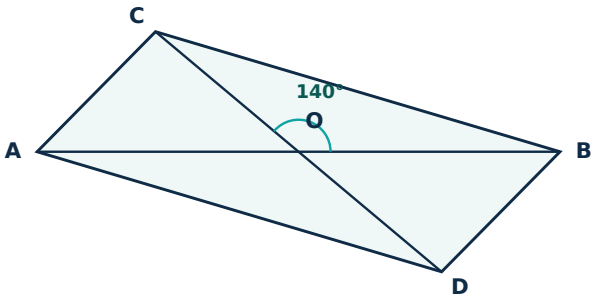


ANSWER

The diagonals of a parallelogram bisect each other. So the diagonals are drawn with a common midpoint O, at the required angle.

### a Steps of construction

- Draw AB = 7 cm and mark its midpoint O (3.5 cm from A).
- At O draw a line l making 140° with AB.
- On l mark C and D on opposite sides of O with OC = OD = 2.5 cm (so CD = 5 cm).
- Join AC, CB, BD and DA. ACBD is the required parallelogram.

### b Why it works

- The diagonals AB and CD bisect each other, so ACBD is a parallelogram (Property 4 and its converse, Q11 (iii) of Section 4.6).

NCERT ARCHIVE

- Its sides are about 5.65 cm and 2.26 cm (check by measuring).

**ACBD is the required parallelogram, drawn by bisecting the 7 cm and 5 cm diagonals at 140°.**

QUESTION 9 *Figure it Out · p. 102*

**3. Using the diagonal properties, construct a rhombus whose diagonals are of lengths 4 cm and 5 cm.**

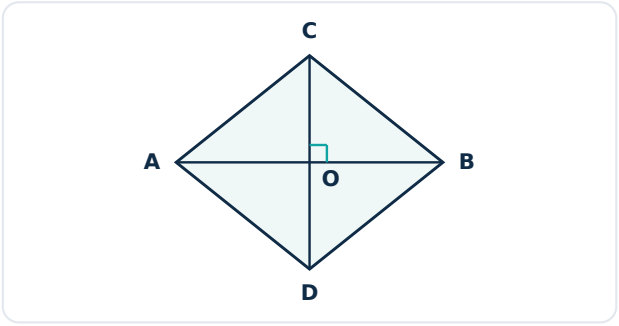


ANSWER

The diagonals of a rhombus bisect each other at right angles. So the diagonals are drawn perpendicular to each other with a common midpoint.

### a Steps of construction

- Draw AB = 5 cm and mark its midpoint O.
- At O draw the perpendicular to AB (compass or set-square).
- On it mark C and D on opposite sides of O with OC = OD = 2 cm (so CD = 4 cm).
- Join AC, CB, BD and DA. ACBD is the required rhombus.

### b Check

- Each side is $\sqrt{(2.5^2 + 2^2)} = \sqrt{10.25} \approx 3.2$ cm; measure to see that all four sides are equal.

**ACBD is the required rhombus, with each side ≈ 3.2 cm.**

NCERT ARCHIVE

CLASS 8 MATHS · CHAPTER 4

# 4.5 Playing with Quadrilaterals

Solutions · 5 questions

**Directions (Questions 1–5):** Solutions to the Geoboard and Joining Triangles activities, numbered in the order in which they appear in the chapter. Activities and constructions are answered with the steps to follow and the reasoning behind them.

QUESTION 1 *Activity · p. 103*

**Geoboard Activity: Place two rubber bands perpendicular to each other, forming diagonals of equal length. Join the ends. What is the quadrilateral that you get? Justify your answer.**

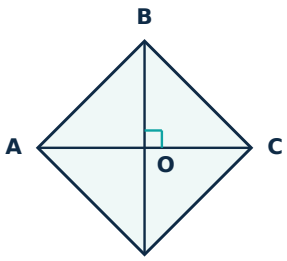


ANSWER

Place the two equal rubber bands so that they cross at their midpoints (the centre), at right angles.

a **Reasoning**

- The diagonals are equal, they bisect each other and they meet at 90°.
- Equal diagonals that bisect each other give a rectangle; perpendicular diagonals make all four triangles at the centre congruent, so all sides are equal (Deduction 5).

**The quadrilateral is a square.**

NCERT ARCHIVE

QUESTION 2 *Activity · p. 103*

**Extend one of the diagonals on both sides by 2 cm. What quadrilateral will you get now? Justify your answer.**

ANSWER

Extending one diagonal by 2 cm on *both* ends keeps its midpoint at the centre O and its direction unchanged.

### a Reasoning

- The diagonals still bisect each other, so the quadrilateral is a parallelogram.
- They are still perpendicular, so $\Delta AOB \cong \Delta COB$ (SAS: OA = OC, $\angle AOB = \angle COB = 90°$, OB common), giving AB = CB.
- A parallelogram with two adjacent sides equal has all sides equal.
- The diagonals are now unequal (for example 8 cm and 12 cm), so it is not a square.

**The quadrilateral is a rhombus (not a square).**

NCERT ARCHIVE

QUESTION 3 *Activity · p. 104*

**Joining Triangles 1: Take two cardboard cutouts of an equilateral triangle of sidelength 8 cm. Can you join them to get a quadrilateral? What type of a quadrilateral is this? Justify your answer.**

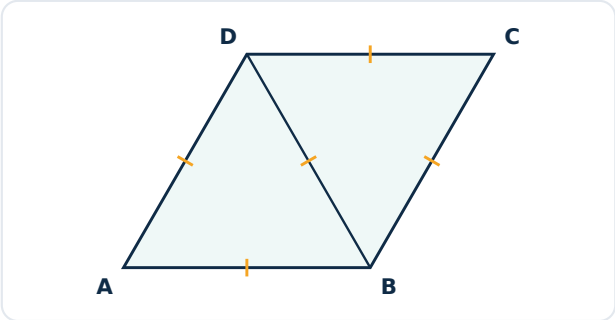


ANSWER

Join the two triangles along a full side (8 cm to 8 cm).

### a The quadrilateral

- Yes. All four outer sides measure 8 cm, so it is a **rhombus**.
- Its angles are 60°, 60° + 60° = 120°, 60°, 120°; the short diagonal is 8 cm (the common side) and the long diagonal is $8\sqrt{3} \approx 13.86$ cm.
- There is only one such shape, since every side of both triangles is 8 cm.

**Joined along a common side, two equilateral triangles of side 8 cm form a rhombus (angles 60°, 120°, 60°, 120°).**

NCERT ARCHIVE

QUESTION 4 *Activity · p. 104*

**Joining Triangles 2: Take two cardboard cutouts of an isosceles triangle with sidelengths 8 cm, 8 cm, and 6 cm. What are the different ways they can be joined to get a quadrilateral? What quadrilaterals are these? Justify your answers.**

ANSWER

To get a quadrilateral the triangles are joined along sides of equal length. Let the triangle be ABC with AB = AC = 8 cm and BC = 6 cm.

### a Joining along the 6 cm side

- The two triangles lie on opposite sides of BC. All four outer sides are 8 cm, so we get a **rhombus** (diagonal 6 cm; the other diagonal is $2\sqrt{55} \approx 14.83$ cm).

### b Joining along an 8 cm side: flipping over the side

- Reflect the copy in the common side AB. The outer sides are 8, 6, 6, 8 with equal sides adjacent (AC = AC′ = 8 and BC = BC′ = 6): a **kite**. Its angles are about 88.1°, 135.9°, 68°, 68°.

### c Joining along an 8 cm side: turning the copy around the midpoint of the side

- Rotate the copy by 180° about the midpoint of AB. The outer sides are 8, 6, 8, 6 with opposite sides equal, so it is a **parallelogram** (not a rectangle, because the angles are 68° and 112°).

**Three quadrilaterals: a rhombus (along 6 cm), a kite and a parallelogram (along 8 cm).**

NCERT ARCHIVE

QUESTION 5 *Activity · p. 105*

**Joining Triangles 3: Take two cardboard cutouts of a scalene triangle with sides 6 cm, 9 cm, and 12 cm. What are the different ways they can be joined to get a quadrilateral? Are you able to identify the different quadrilaterals that are obtained by joining the triangles? Justify your answer whenever you identify a quadrilateral.**

ANSWER

Join the two triangles along equal sides. There are three choices of common side (6, 9 or 12 cm), and for each choice two ways: flip over the side, or rotate about its midpoint.

### a Turning the copy about the midpoint of the common side (3 ways)

- The outer sides are the other two sides, each used twice, with opposite sides equal: a **parallelogram**.
- Common side 12 cm: sides 6, 9, 6, 9. Common side 9 cm: sides 6, 12, 6, 12. Common side 6 cm: sides 9, 12, 9, 12.

### b Flipping the copy over the common side (3 ways)

- The outer sides are the other two sides, with equal sides adjacent: a **kite**.
- Common side 12 cm: sides 6, 6, 9, 9 (the kite of Section 4.6, with equal sides adjacent).
- Common sides 6 cm and 9 cm: the kites are non-convex (arrow-head shape), because the 104.5° angle of the triangle doubles to 209°.

### c Why only these

- No side of the triangle equals another, so no rhombus, rectangle or isosceles trapezium arises.

**Six ways: three parallelograms and three kites.**

NCERT ARCHIVE

CLASS 8 MATHS · CHAPTER 4

# 4.6 Kite and Trapezium

Solutions · 14 questions

**Directions (Questions 1–14):** Solutions to the in-text questions and Figure it Out, numbered in the order in which they appear in the chapter. Activities and constructions are answered with the steps to follow and the reasoning behind them.

QUESTION 1 *In-text · p. 105*

**Kite (A kite is a quadrilateral that can be labelled ABCD such that AB = BC and CD = DA). Property 1: In the kite, show that the diagonal BD (i) bisects ∠ABC and ∠ADC, (ii) bisects the diagonal AC, that is, AO = OC, and is perpendicular to it. Hint: Is ΔAOB ≅ ΔCOB?**

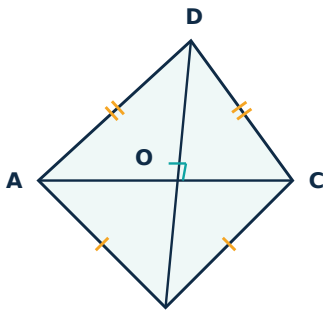


ANSWER

Let the diagonals AC and BD of the kite ABCD meet at O, where AB = BC and CD = DA.

### a (i) BD bisects ∠ABC and ∠ADC

- In ΔABD and ΔCBD: AB = CB, AD = CD and BD is common, so ΔABD ≅ ΔCBD (SSS).
- Hence ∠ABD = ∠CBD and ∠ADB = ∠CDB: BD bisects ∠ABC and ∠ADC.

NCERT ARCHIVE

### b (ii) BD bisects AC at right angles

- In ΔAOB and ΔCOB: AB = CB, ∠ABO = ∠CBO (from (i)) and BO is common, so ΔAOB ≅ ΔCOB (SAS).
- Hence AO = OC and ∠AOB = ∠COB. As ∠AOB + ∠COB = 180°, each is 90°.

**The diagonal BD bisects ∠B and ∠D, and bisects the diagonal AC at 90°.**

QUESTION 2 *In-text · p. 106*

**Trapezium: A trapezium is a quadrilateral with at least one pair of parallel opposite sides. Construct a trapezium. Measure the base angles. Can you find the remaining angles without measuring them?**

ANSWER

Let PQRS be a trapezium with PQ ∥ SR, so PS and QR are transversals to the parallel sides.

### a Property 1

- Interior angles on the same side of a transversal add up to 180°.
- ∠S + ∠P = 180° (transversal PS) and ∠R + ∠Q = 180° (transversal QR).

### b Finding the remaining angles

- If the base angles ∠P and ∠Q are measured, then ∠S = 180° − ∠P and ∠R = 180° − ∠Q.
- Example: ∠P = 70° and ∠Q = 50° give ∠S = 110° and ∠R = 130° (check: 70 + 50 + 110 + 130 = 360).

**∠S = 180° − ∠P and ∠R = 180° − ∠Q.**

NCERT ARCHIVE

QUESTION 3 *In-text · pp. 106–107*

**Isosceles trapezium: How do we construct an isosceles trapezium? Construct UVWX with UV ∥ XW and UX = VW. Can you find the remaining angles? Consider XY and WZ perpendicular to UV. What type of quadrilateral is XWZY? Show that ΔUXY ≅ ΔVWZ (How?). Thus ∠U = ∠V.**

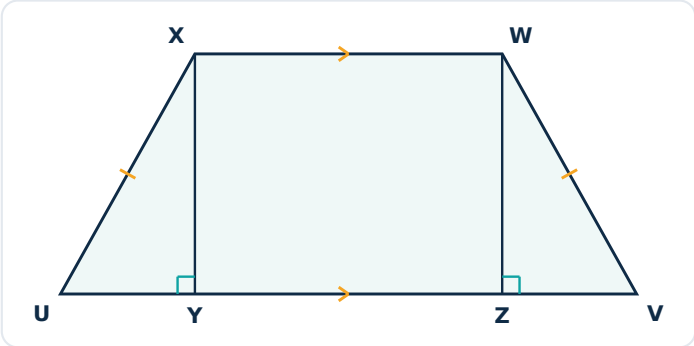


ANSWER

In an isosceles trapezium UVWX, UV ∥ XW and the non-parallel sides UX and VW are equal. XY and WZ are perpendicular to UV.

### a Construction

- Draw the base UV and the angle ∠U with arm UX of the required length; draw a line through X parallel to UV.
- Mark W on that line with VW = UX; join VW.

### b XWZY is a rectangle

- XW ∥ YZ, so ∠XYZ + ∠YXW = 180°, and ∠XYZ = 90° gives ∠YXW = 90°; similarly ∠XWZ = 90° and ∠WZY = 90°.
- All four angles are 90°, so XWZY is a **rectangle**; hence XY = WZ.

### c ΔUXY ≅ ΔVWZ

- ∠UYX = ∠VZW = 90°, hypotenuse UX = VW and XY = WZ, so the right triangles are congruent (RHS; equivalently UY = VZ by Pythagoras, then SSS).
- So ∠U = ∠V, and the remaining angles are ∠X = ∠W = 180° − ∠U.

NCERT ARCHIVE

**XWZY is a rectangle; ΔUXY ≅ ΔVWZ, so ∠U = ∠V (Property 2: base angles of an isosceles trapezium are equal).**

QUESTION 4 *Figure it Out · p. 107*

**1. Find all the sides and the angles of the quadrilateral obtained by joining two equilateral triangles with sides 4 cm.**

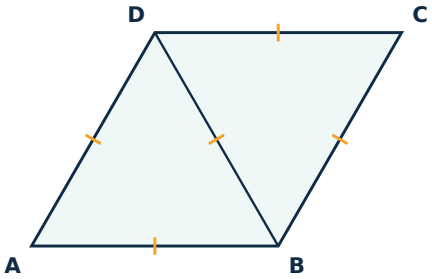


ANSWER

The two equilateral triangles ABD and CDB of side 4 cm are joined along a common side BD to form the quadrilateral ABCD.

### a Sides

- Every outer side comes from a triangle side: AB = BC = CD = DA = **4 cm**.
- The common side BD (a diagonal) is also 4 cm; the other diagonal AC = $4\sqrt{3} \approx 6.93$ cm.

### b Angles

- Each angle of an equilateral triangle is 60°.
- ∠A = 60°, ∠C = 60°, ∠B = 60° + 60° = **120°**, ∠D = 60° + 60° = **120°**.
- Check: 60° + 120° + 60° + 120° = 360°.

### c Type

All sides are equal, so ABCD is a rhombus.

**ABCD is a rhombus with all sides 4 cm; ∠A = ∠C = 60° and ∠B = ∠D = 120°.**

NCERT ARCHIVE

QUESTION 5 *Figure it Out · p. 107*

## 2. Construct a kite whose diagonals are of lengths 6 cm and 8 cm.

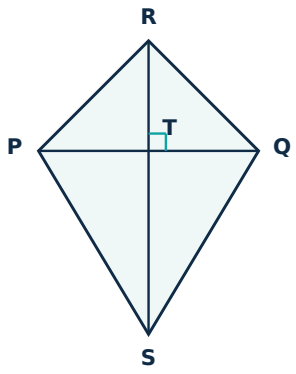


ANSWER

In a kite, one diagonal bisects the other at right angles (Property 1). So draw the diagonal PQ = 6 cm and the other diagonal RS = 8 cm along its perpendicular bisector.

### a Steps of construction

- Draw PQ = 6 cm and construct its perpendicular bisector; it meets PQ at T (the midpoint, PT = TQ = 3 cm).
- On the perpendicular bisector mark R and S on opposite sides of T so that RS = 8 cm, choosing T **not** the midpoint of RS, e.g. TR = 3 cm and TS = 5 cm.
- Join PR, RQ, QS and SP. PRQS is the required kite.

### b Check

- PR = RQ = $\sqrt{(3^2 + 3^2)} \approx 4.24$ cm and PS = QS = $\sqrt{(3^2 + 5^2)} \approx 5.83$ cm: two pairs of equal adjacent sides.
- If T were the midpoint of RS (TR = TS = 4 cm) the figure would be a rhombus, a special kite.

**PRQS is the required kite, with PQ = 6 cm, RS = 8 cm and PQ ⊥ RS.**

NCERT ARCHIVE

QUESTION 6 *Figure it Out · p. 107*

**3. Find the remaining angles in the following trapeziums — [(i) trapezium PQRS with PQ ∥ SR, ∠P = 135°, ∠Q = 105°; (ii) isosceles trapezium ABCD with AB ∥ DC, AD = BC and ∠D = 100°]**

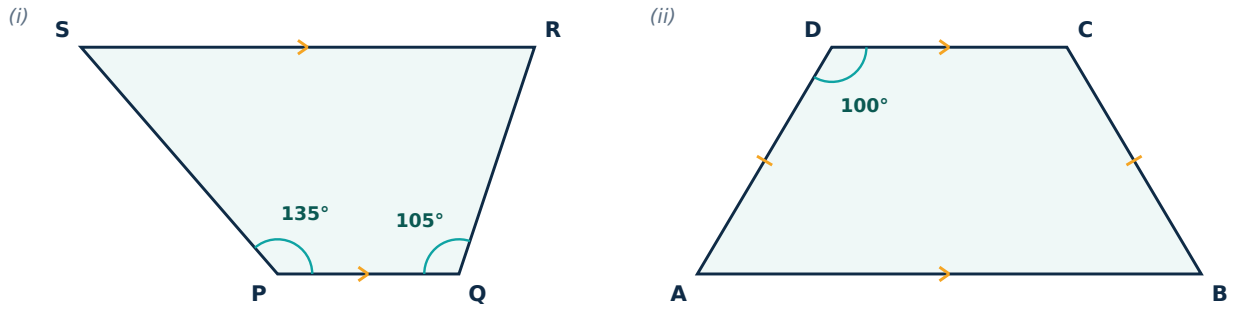


ANSWER

In a trapezium, the interior angles on the same side of a transversal between the parallel sides add up to 180°.

### a (i) PQ ∥ SR

- ∠S + ∠P = 180°, so ∠S = 180° − 135° = **45°**.
- ∠R + ∠Q = 180°, so ∠R = 180° − 105° = **75°**.
- Check: 135° + 105° + 45° + 75° = 360°.

### b (ii) AB ∥ DC and AD = BC

- ∠A + ∠D = 180°, so ∠A = 180° − 100° = **80°**.
- Since AD = BC, it is an isosceles trapezium and the angles on the same base are equal: ∠B = ∠A = **80°**.
- ∠C = 180° − ∠B = **100°** (= ∠D).
- Check: 80° + 80° + 100° + 100° = 360°.

**(i) ∠S = 45°, ∠R = 75° (ii) ∠A = ∠B = 80°, ∠C = 100°**

NCERT ARCHIVE

QUESTION 7 *Figure it Out · p. 107*

**4. Draw a Venn diagram showing the set of parallelograms, kites, rhombuses, rectangles, and squares. Then, answer the following questions — (i) What is the quadrilateral that is both a kite and a parallelogram? (ii) Can there be a quadrilateral that is both a kite and a rectangle? (iii) Is every kite a rhombus? If not, what is the correct relationship between these two types of quadrilaterals?**

ANSWER

Every rhombus has four equal sides, so it has equal adjacent sides and is a kite; it also has parallel opposite sides, so it is a parallelogram. A square is a rhombus and a rectangle.

### a Venn diagram

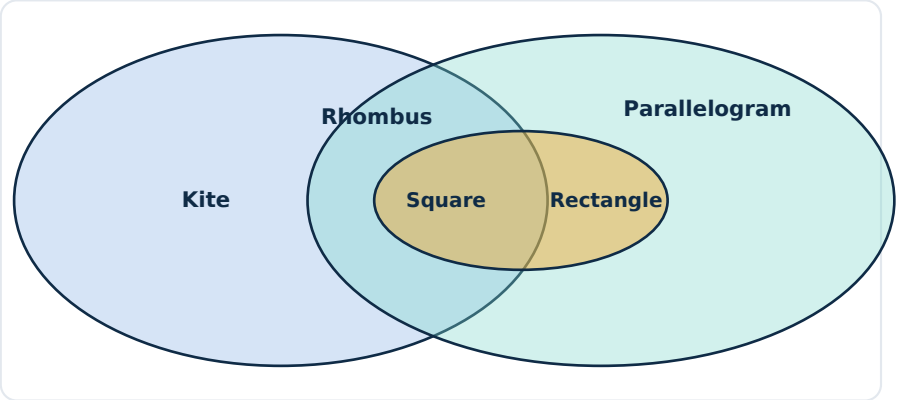


### b (i) Both a kite and a parallelogram

- A parallelogram has equal opposite sides and a kite has two equal adjacent sides; together, AB = BC = CD = DA.
- So it is a **rhombus** (squares included, since a square is a rhombus).

### c (ii) Both a kite and a rectangle

- **Yes**, a square: its adjacent sides are equal (AB = BC and CD = DA) and all its angles are 90°.
- Apart from squares there is none: a rectangle has equal opposite sides, so a kite that is a rectangle has all four sides equal.
- Note: the answer key printed after the chapter says “No”, but the chapter’s own definition of a kite includes the square.

NCERT ARCHIVE

### d (iii) Is every kite a rhombus?

- **No.** A kite need not have all four sides equal (e.g. sides 3, 3, 5, 5).
- Every rhombus is a kite, so the set of rhombuses is a part of the set of kites.

**(i) Rhombus (including squares) (ii) Yes, only a square (iii) No; every rhombus is a kite, but a kite need not be a rhombus.**

QUESTION 8 *Figure it Out · p. 107*

**5. If PAIR and RODS are two rectangles, find ∠IOD. [In the figure, O lies on side AI of rectangle PAIR, RODS is a rectangle with vertex R common, and ∠IRO = 30°.]**

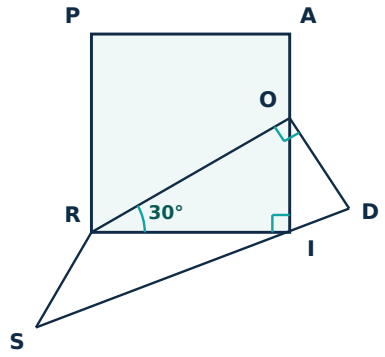


ANSWER

In the figure ∠IRO = 30° and O lies on the side AI, so A, O, I are on one straight line.

### a Step 1: ΔROI

- ∠RIO = 90° (angle of rectangle PAIR).
- In ΔROI: ∠ROI = 180° − 90° − 30° = **60°**.

### b Step 2: Angle ROD

- ∠ROD = 90° (angle of rectangle RODS).

NCERT ARCHIVE

### c Step 3: Straight line

- A, O, I lie on one straight line, and the angles ∠ROI, ∠ROD and ∠IOD together make a straight angle: ∠ROI + ∠ROD + ∠IOD = 180°.
- 60° + 90° + ∠IOD = 180°, so ∠IOD = **30°**.

**∠IOD = 30°**

QUESTION 9 *Figure it Out · p. 107*

## 6. Construct a square with diagonal 6 cm without using a protractor.

ANSWER

The diagonals of a square are equal, bisect each other and are perpendicular. A compass can make the right angle.

### a Steps of construction

- Draw AB = 6 cm.
- Draw the perpendicular bisector of AB with a compass; it meets AB at its midpoint O.
- On it mark C and D on opposite sides of O with OC = OD = 3 cm.
- Join AC, CB, BD and DA. ACBD is the required square.

### b Check

Each side = $\sqrt{(3^2 + 3^2)} = 3\sqrt{2} \approx 4.24$ cm.

**ACBD is the required square of side ≈ 4.24 cm.**

NCERT ARCHIVE

QUESTION 10 *Figure it Out · p. 108*

**7. CASE is a square. The points U, V, W and X are the midpoints of the sides of the square. What type of quadrilateral is UVWX? Find this by using geometric reasoning, as well as by construction and measurement. Find other ways of constructing a square within a square such that the vertices of the inner square lie on the sides of the outer square, as shown in Figure (b).**

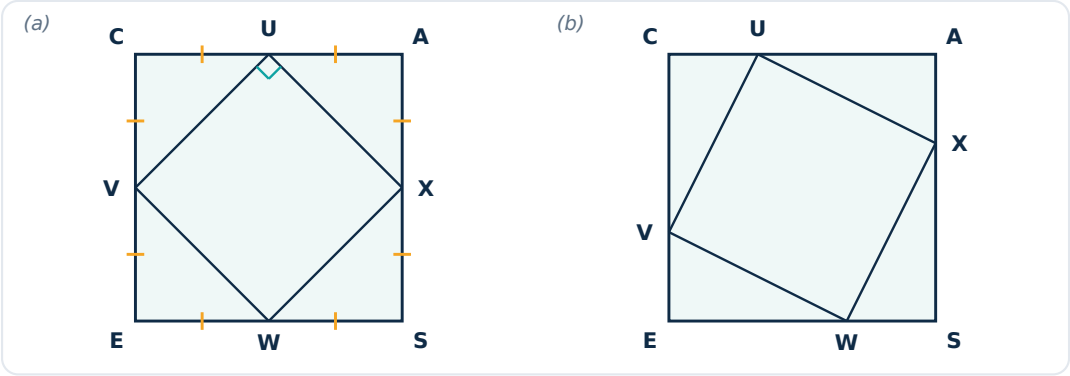


ANSWER

Let the side of the square CASE be s. The midpoints are U on CA, X on AS, W on SE and V on EC (in order around the square).

### a Geometric reasoning

- The four corner triangles ΔCUV, ΔAUX, ΔSXW and ΔEWV are right-angled with both legs s/2, so they are congruent (SAS).
- Hence UV = UX = XW = WV = (s/2)√2 = s/√2: all four sides of UVWX are **equal**.
- In each corner triangle the two acute angles are 45°. At U: ∠CUV = 45° and ∠AUX = 45°, so ∠VUX = 180° − 45° − 45° = 90°; the same holds at X, W and V.
- Equal sides and four right angles: UVWX is a **square**.

### b Construction and measurement

- Draw a square CASE of side 6 cm, mark the midpoints and join them. Measuring gives UV = UX = XW = WV ≈ 4.24 cm and every angle 90°.

NCERT ARCHIVE

### c Other squares inside a square (Fig. b)

- Choose any length t (0 < t < s). Mark U on CA with CU = t, X on AS with AX = t, W on SE with SW = t and V on EC with EV = t.
- The four corner triangles are congruent (legs t and s − t), so the four sides of UXWV are equal to $\sqrt{(t^2 + (s - t)^2)}$.
- At U the angles ∠CUV and ∠AUX add up to 90° (acute angles of congruent right triangles), so ∠VUX = 90°; likewise at X, W, V. Every such quadrilateral is a square.

**UVWX is a square; joining points that divide each side in the same ratio gives other squares inside the square.**

QUESTION 11 *Figure it Out · p. 108*

**8. If a quadrilateral has four equal sides and one angle of 90°, will it be a square? Find the answer using geometric reasoning as well as by construction and measurement.**

ANSWER

A quadrilateral with four equal sides is a rhombus, and a rhombus is a parallelogram.

### a Geometric reasoning

- In a parallelogram, adjacent angles add up to 180° and opposite angles are equal.
- If one angle is 90°, the adjacent angles are 180° − 90° = 90° and the opposite angle is 90°.
- So all four angles are 90° and all four sides are equal: it is a **square**.

### b Construction and measurement

- Draw a right angle at A, mark B and D with AB = AD, and find C with arcs of the same radius from B and D.
- Measuring shows ∠B = ∠C = ∠D = 90°.

**Yes, it will be a square.**

NCERT ARCHIVE

QUESTION 12 *Figure it Out · p. 108*

**9. What type of a quadrilateral is one in which the opposite sides are equal? Justify your answer. Hint: Draw a diagonal and check for congruent triangles.**

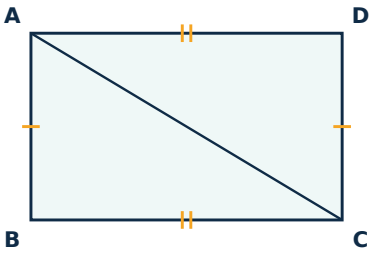


ANSWER

Take a quadrilateral ABCD with AB = CD and BC = DA, and draw the diagonal AC.

### a Proof

- In ΔABC and ΔCDA: AB = CD, BC = DA and AC is common, so ΔABC ≅ ΔCDA (SSS).
- Hence ∠BAC = ∠DCA; these are alternate angles for AB and DC with transversal AC, so **AB ∥ DC**.
- Also ∠BCA = ∠DAC; alternate angles for BC and AD with transversal AC, so **BC ∥ AD**.
- Both pairs of opposite sides are parallel.

**It is a parallelogram.**

NCERT ARCHIVE

QUESTION 13 *Figure it Out · p. 108 (Try This)*

**10. Will the sum of the angles in a quadrilateral such as the following one also be 360°? Find the answer using geometric reasoning as well as by constructing this figure and measuring. [A quadrilateral ABCD that is not convex: D lies inside ΔABC.]**

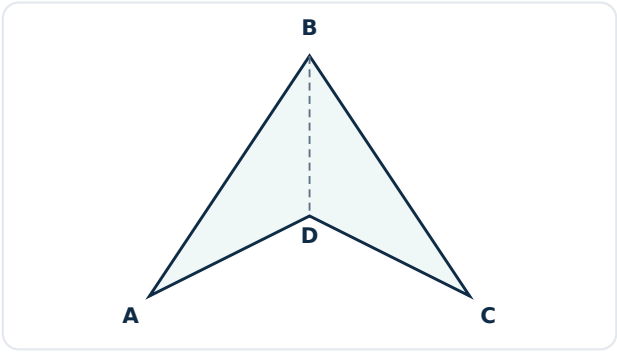


ANSWER

The quadrilateral ABCD has a reflex angle at D. Draw the diagonal BD, which lies inside the figure.

### a Geometric reasoning

- In ΔABD: ∠DAB + ∠ABD + ∠ADB = 180°. In ΔCBD: ∠DCB + ∠CBD + ∠BDC = 180°.
- Adding: ∠DAB + (∠ABD + ∠CBD) + ∠DCB + (∠ADB + ∠BDC) = 360°.
- Now ∠ABD + ∠CBD = ∠B, and ∠ADB + ∠BDC is the (reflex) angle at D inside the quadrilateral. So ∠A + ∠B + ∠C + ∠D = 360°.

### b Measurement

- For A(0, 0), B(2, 3), C(4, 0), D(2, 1): ∠A = ∠C ≈ 29.7°, ∠B ≈ 67.4° and the reflex ∠D ≈ 233.1°. Sum ≈ 360°.

**Yes, the sum of the angles is 360° for this quadrilateral too.**

NCERT ARCHIVE

QUESTION 14 *Figure it Out · pp. 108–109*

**11. State whether the following statements are true or false. Justify your answers. (i) A quadrilateral whose diagonals are equal and bisect each other must be a square. (ii) A quadrilateral having three right angles must be a rectangle. (iii) A quadrilateral whose diagonals bisect each other must be a parallelogram. (iv) A quadrilateral whose diagonals are perpendicular to each other must be a rhombus. (v) A quadrilateral in which the opposite angles are equal must be a parallelogram. (vi) A quadrilateral in which all the angles are equal is a rectangle. (vii) Isosceles trapeziums are parallelograms.**

ANSWER

Each statement is tested using the properties proved in this chapter; a single counter-example is enough to show a statement false.

### a Answers with justification

| | Statement | Verdict | Justification |
|---|---|---|---|
| (i) | Equal diagonals bisecting each other ⇒ square | **False** | Such a quadrilateral is a rectangle (Q5); a 4 cm × 6 cm rectangle has equal, bisecting diagonals but is not a square. |
| (ii) | Three right angles ⇒ rectangle | **True** | The fourth angle = 360° − 270° = 90°, so all angles are 90°. |
| (iii) | Diagonals bisect each other ⇒ parallelogram | **True** | The triangles at O are congruent (SAS), so alternate angles are equal and opposite sides are parallel. |
| (iv) | Perpendicular diagonals ⇒ rhombus | **False** | A kite with unequal adjacent sides has perpendicular diagonals but is not a rhombus. |
| (v) | Opposite angles equal ⇒ parallelogram | **True** | If ∠A = ∠C = x and ∠B = ∠D = y then 2x + 2y = 360°, so x + y = 180°; co-interior angles are supplementary, so opposite sides are parallel. |
| (vi) | All angles equal ⇒ rectangle | **True** | Each angle = 360° ÷ 4 = 90°, so it is a rectangle. |
| (vii) | Isosceles trapezium ⇒ parallelogram | **False** | It has only one pair of parallel sides; e.g. angles 80°, 80°, 100°, 100°, whose opposite angles are not equal. |

**(i) False (ii) True (iii) True (iv) False (v) True (vi) True (vii) False**

NCERT ARCHIVE

CLASS 8 MATHS · CHAPTER 4

# 4.7 Puzzle Time: Which Quad?

Solutions · 3 questions

**Directions (Questions 1–3):** Solutions to the folding activity, numbered in the order in which they appear in the chapter. Activities and constructions are answered with the steps to follow and the reasoning behind them.

QUESTION 1 *Puzzle Time · p. 111*

**Which Quad? Gameplay: 1. Fold a sheet into half. 2. Now, fold it once more into a quarter. 3. Make a triangular crease at the corner that is at the middle of the paper. 4. Open the sheet. What is the shape formed by the creases?**

ANSWER

The two folds of the sheet are perpendicular lines that meet at the centre O of the sheet. The corner of the quarter sheet is O.

### a Shape of the creases

- The triangular crease cuts off the corner O, meeting the two fold lines at points at distances p and q from O.
- When the paper is opened, the four copies of the crease form a quadrilateral whose diagonals lie along the two folds, have lengths 2p and 2q, bisect each other at O and are perpendicular.
- Perpendicular diagonals that bisect each other give a **rhombus**.

**The shape formed by the creases is a rhombus.**

NCERT ARCHIVE

QUESTION 2 *Puzzle Time · p. 111*

**5. How would you fold the quarter paper to get the kinds of creases shown in the following image (several rhombuses one inside another)?**

ANSWER

Each rhombus comes from one triangular crease at the corner O (see the previous question).

### a Folding

- Make the first triangular crease close to the corner O, then make more triangular creases, each parallel to the first and a little farther from O.
- Opening the sheet shows the nested rhombuses; each has its diagonals along the two folds.

**Fold the corner several times with creases parallel to each other, at increasing distances from O.**

QUESTION 3 *Puzzle Time · p. 111*

**6. How would you fold the quarter paper such that a square is formed?**

ANSWER

A rhombus becomes a square when its diagonals are equal (equal diagonals that bisect each other at 90° give a square).

### a Folding

- Make the triangular crease so that it meets the two folds at **equal distances** from the corner O (p = q); for example, mark 5 cm from O on each fold line and fold along the line joining the two marks.
- On opening, the diagonals 2p and 2p are equal and perpendicular, so the creases form a square.

**Fold so that the crease cuts equal lengths from the two folds; the creases then form a square.**

NCERT ARCHIVE